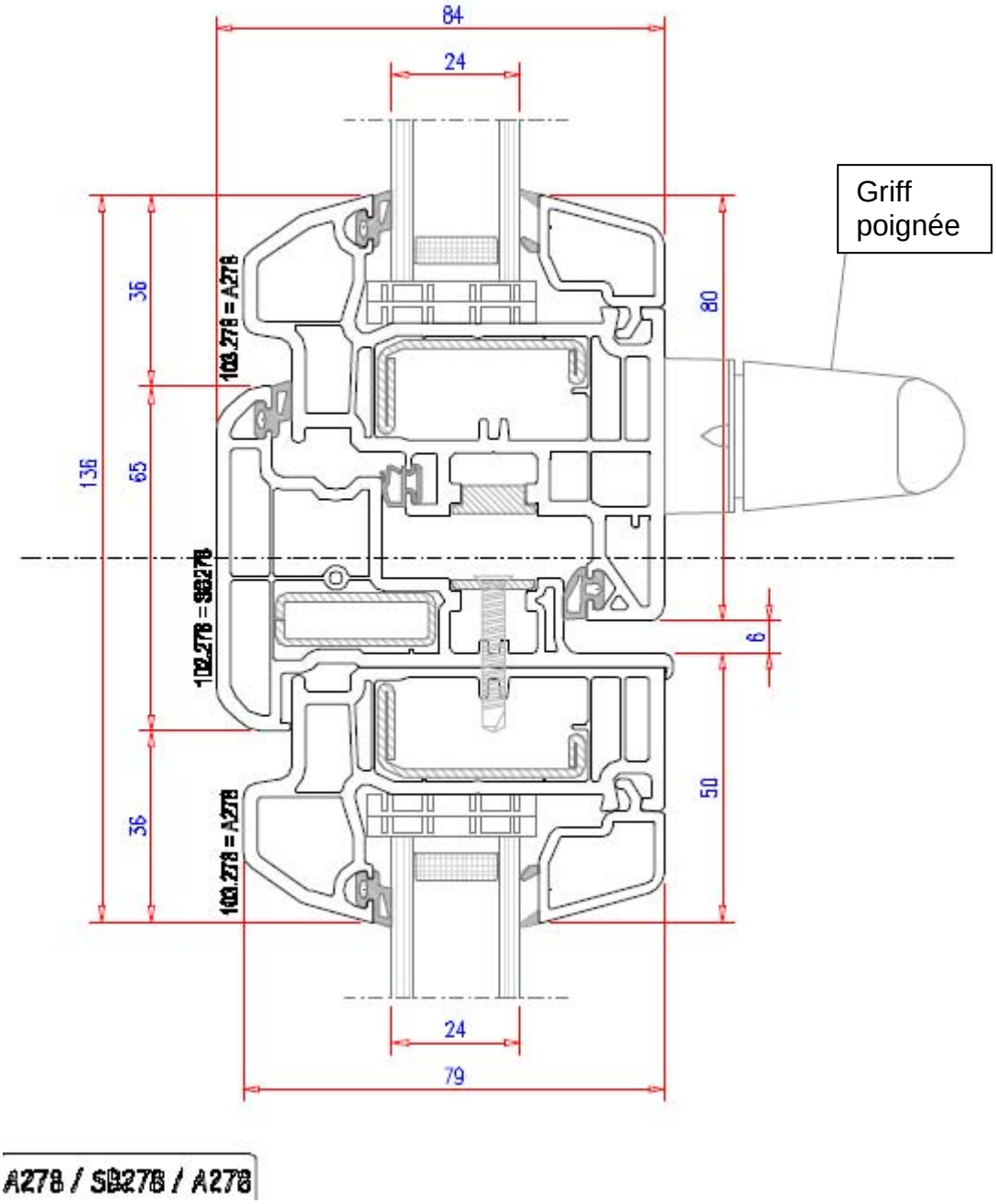SOFTLINE-MD 70